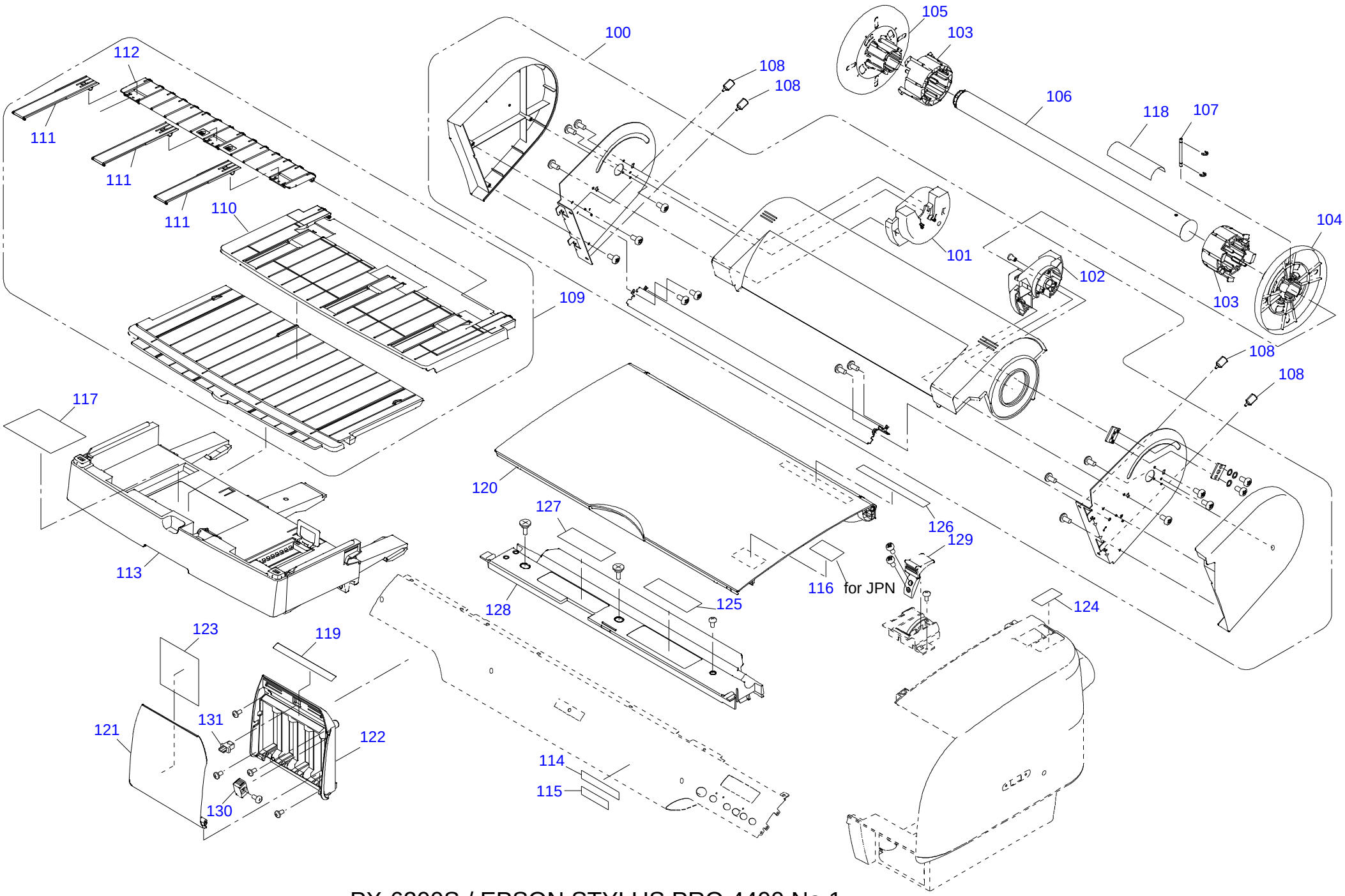

PX-6200S / EPSON STYLUS PRO 4400 No.1

Rev.01 C593-CASE-011C4

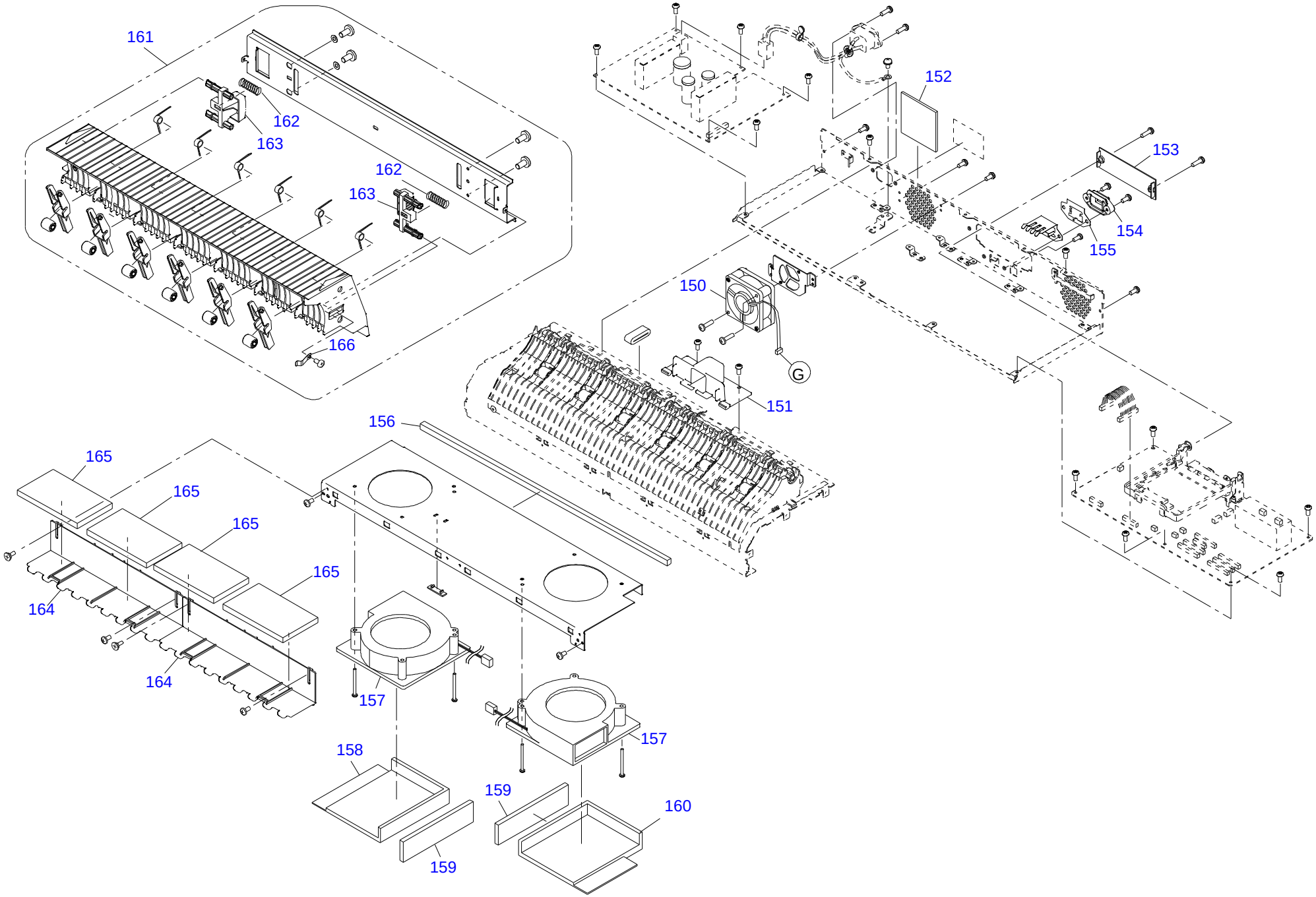

PX-6200S,6500 / EPSON STYLUS PRO 4400,4800 No.2

Rev.01

C593-CASE-021

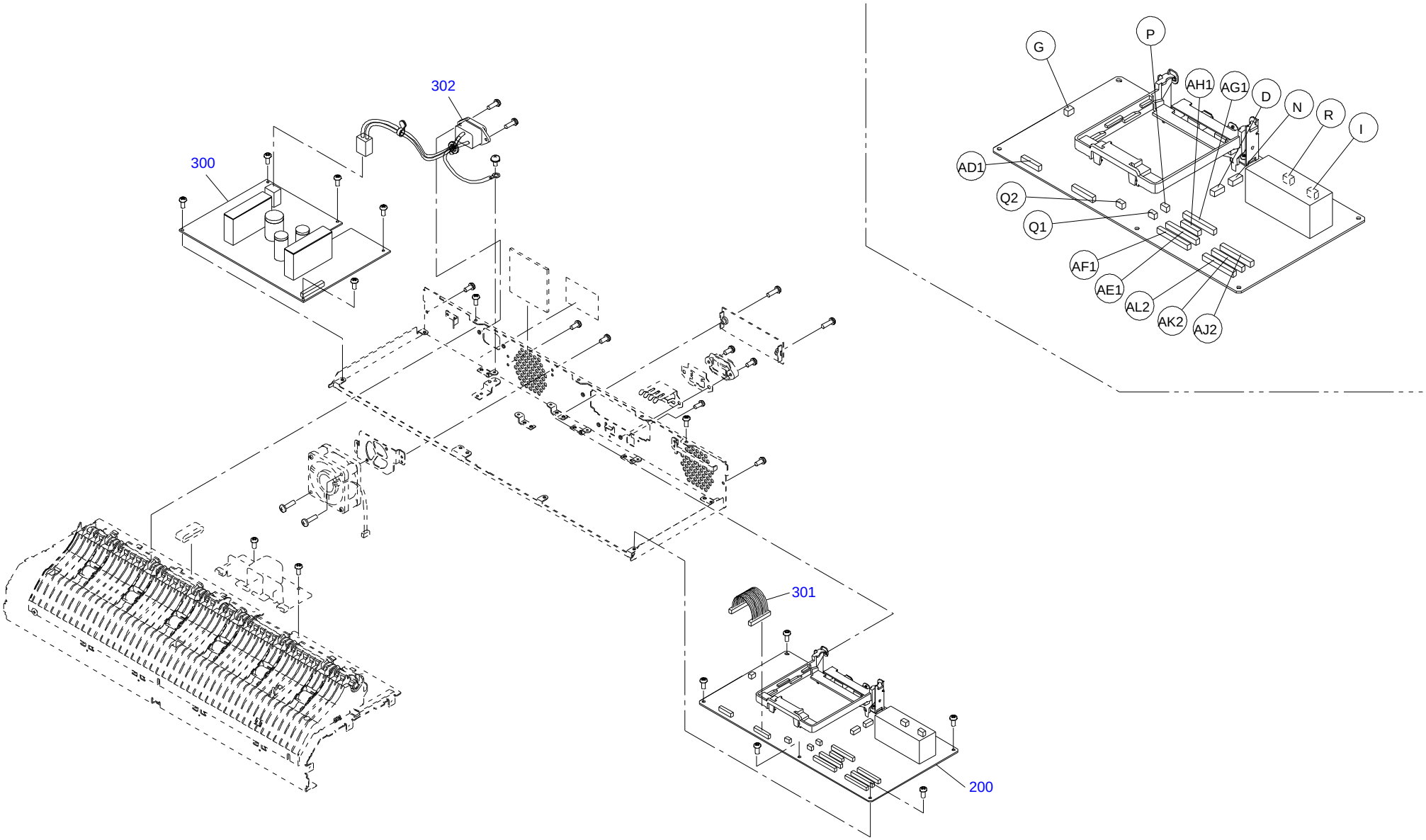
302
300
301
200
G
P
AH1
AG1
D
N
R
I
AD1
Q2
Q1
AF1
AE1
AL2
AK2
AJ2

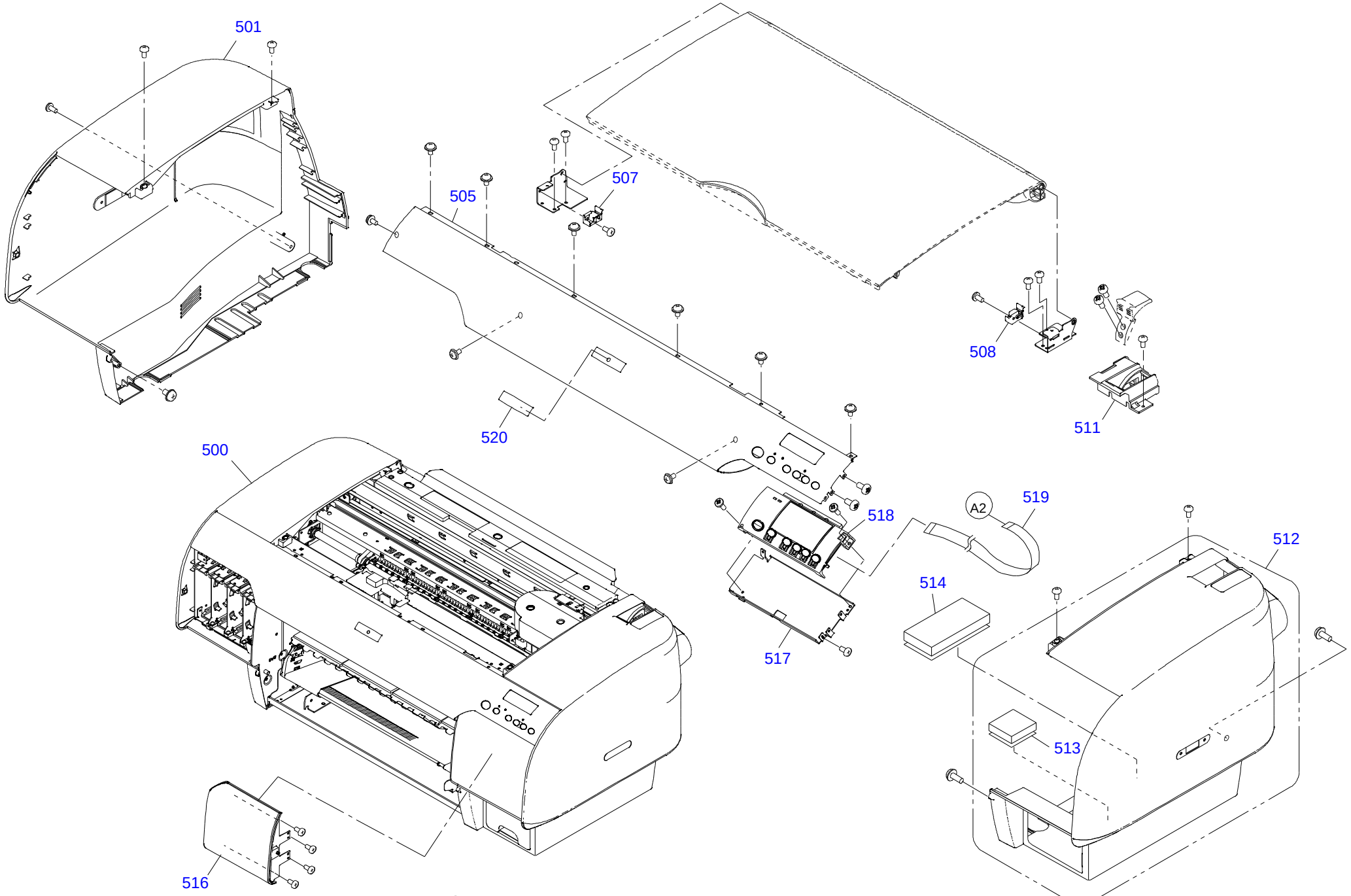

PX-6200S / EPSON STYLUS PRO 4400 No.4

Rev.01 C593-MECH-011C4

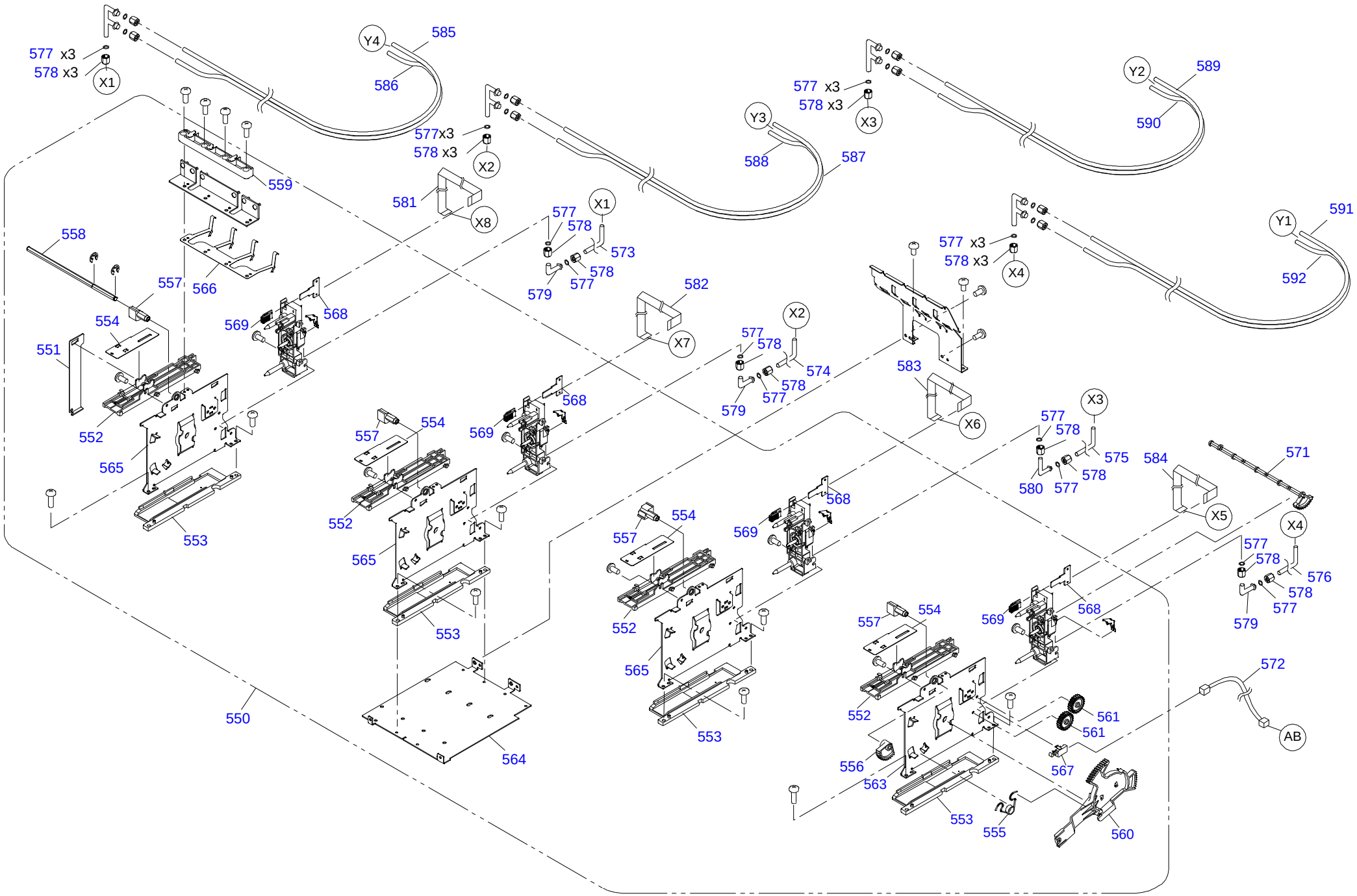

PX-6200S / EPSON STYLUS PRO 4400 No.5 Rev.01 C593-MECH-021C4

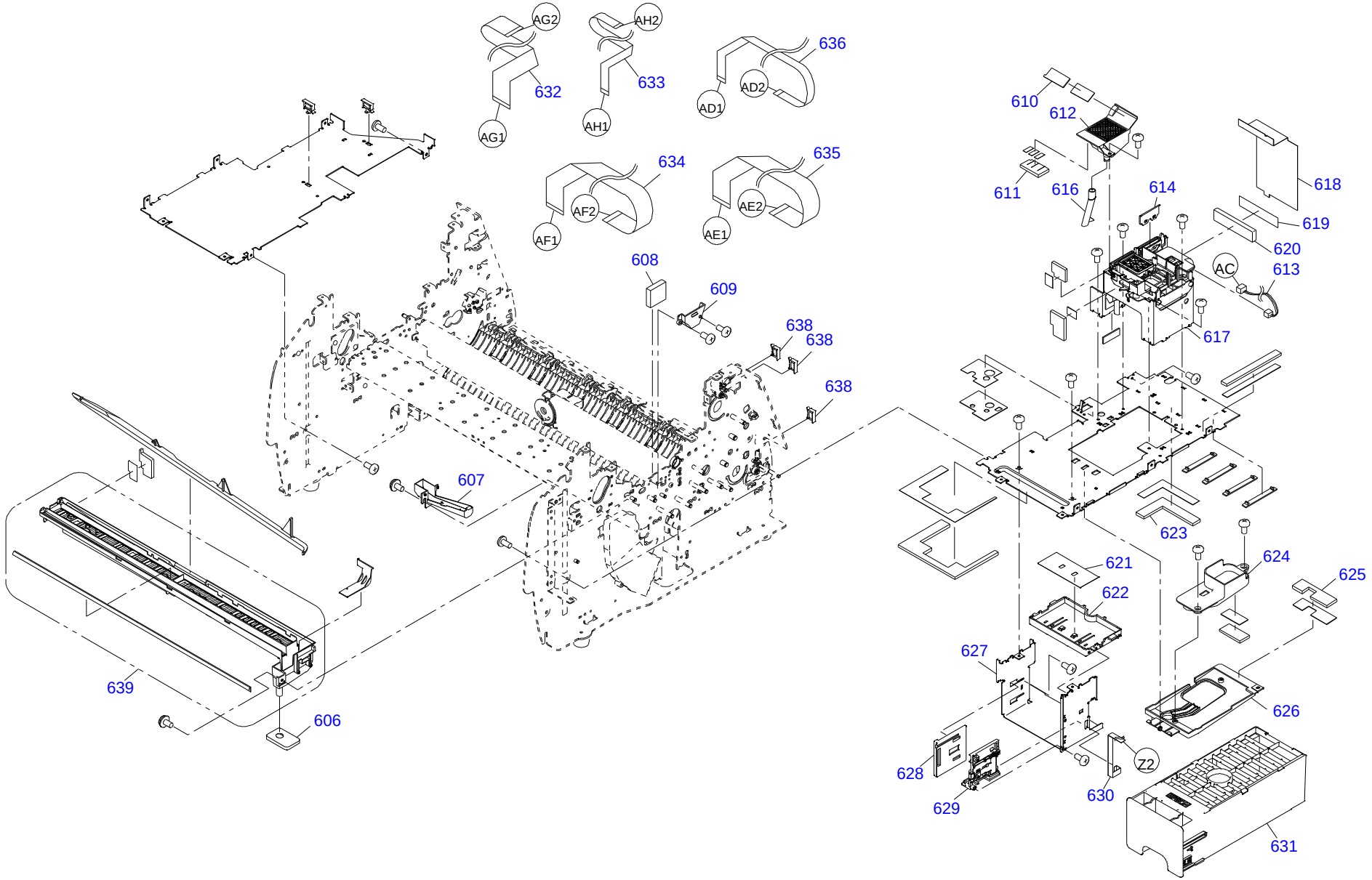

PX-6200S,6500 / EPSON STYLUS PRO 4400,4800 No.6 Rev.01 C593-MECH-031

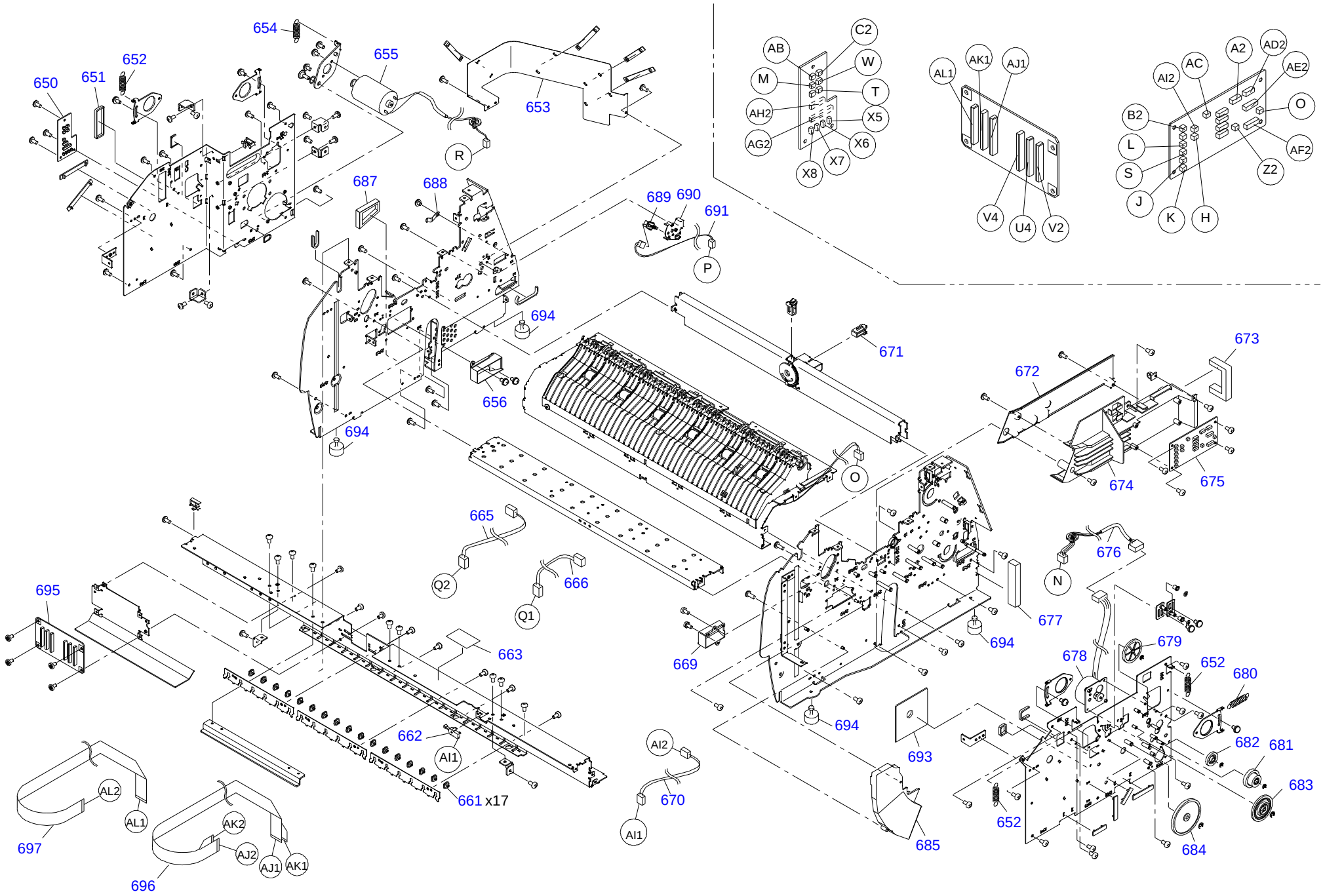

PX-6200S / EPSON STYLUS PRO 4400 No.7 Rev.01 C593-MECH-041

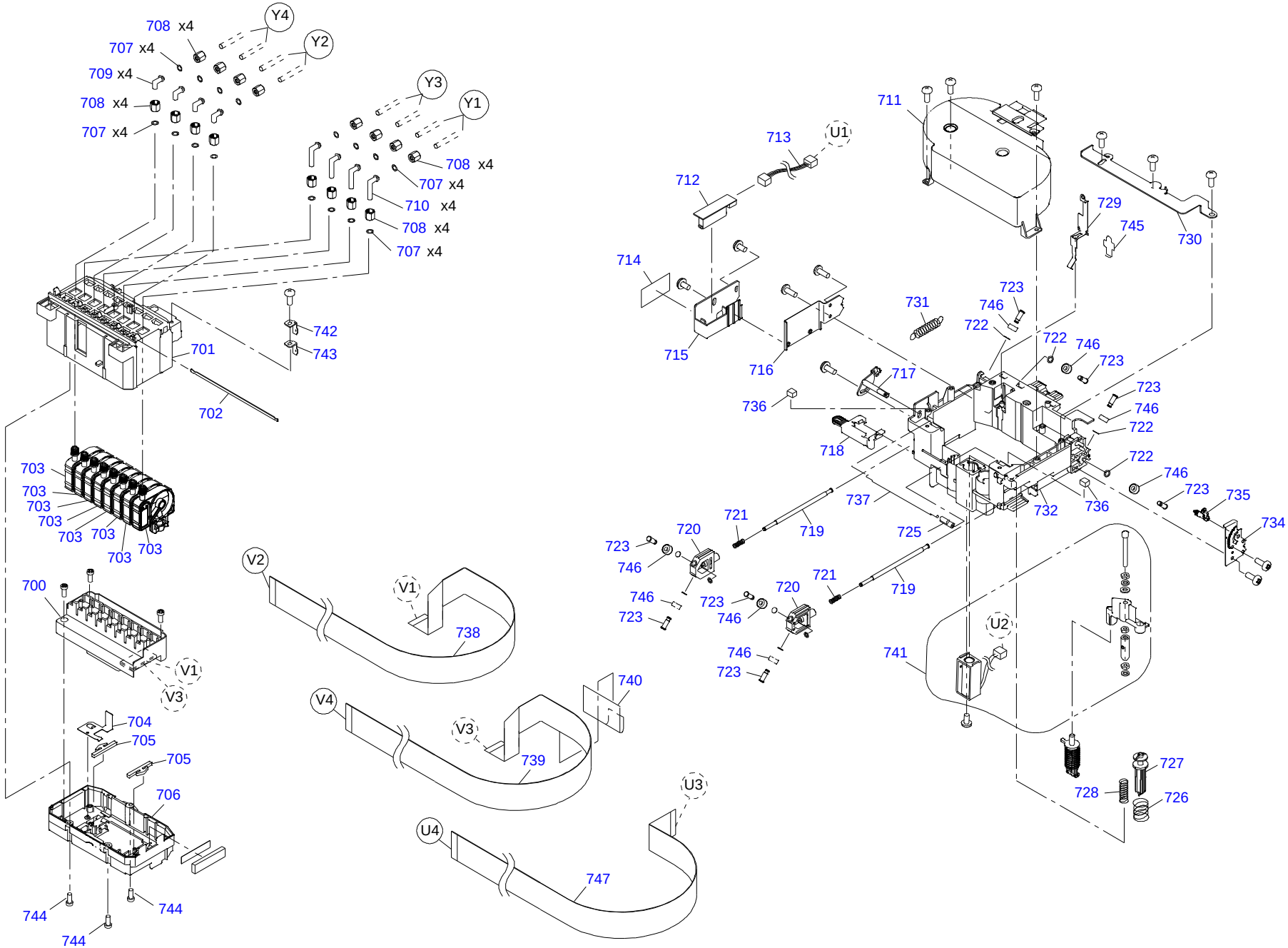

PX-6200S,6500 / EPSON STYLUS PRO 4400,4800 No.8 Rev.02 C593-MECH-052

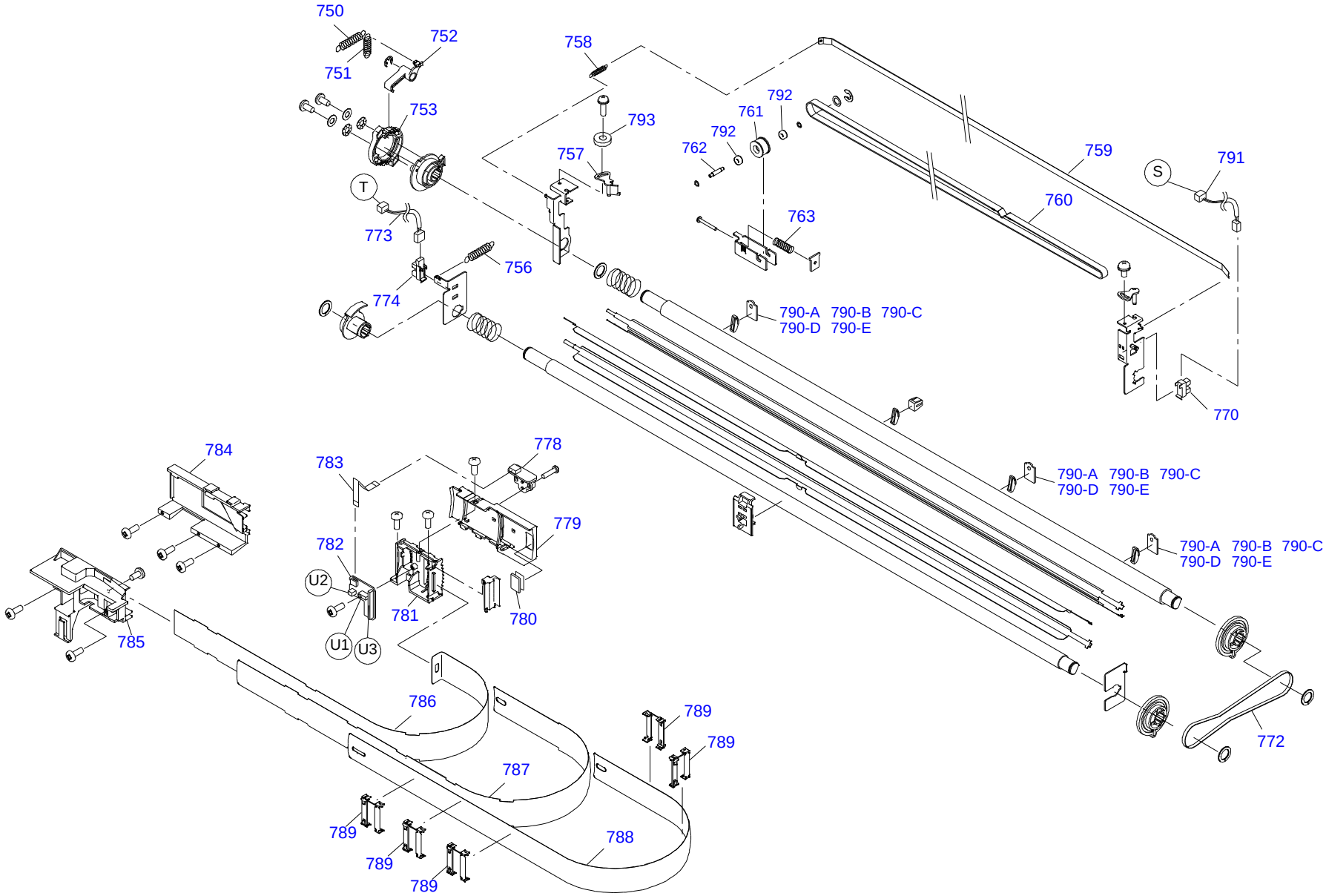
750
751
752
753
758
793
757
792
761
792
762
763
759
760
791
S
T
773
774
756
790-A 790-B 790-C
790-D 790-E
770
784
783
778
779
782
U2
U1
U3
781
780
785
786
787
788
789
789
789
789
789
790-A 790-B 790-C
790-D 790-E
790-A 790-B 790-C
790-D 790-E
772

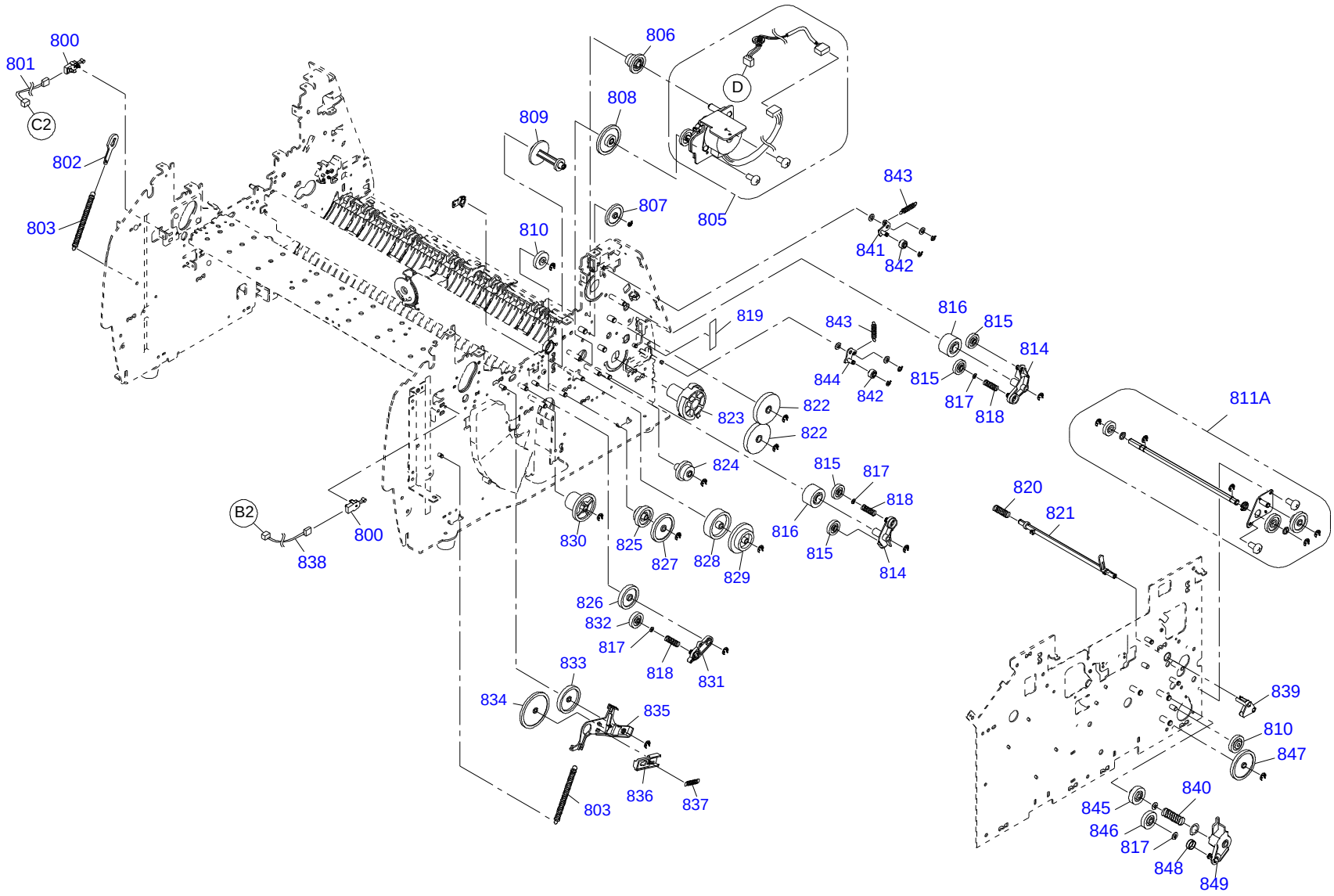
800
801
C2
802
803
806
D
808
809
807
805
810
843
841
842
819
843
844
842
816
815
814
815
817
818
811A
822
823
822
824
815
817
818
816
815
814
820
821
B2
800
838
830
825
827
828
829
826
832
817
818
831
833
834
835
836
837
803
839
810
847
840
845
846
817
848
849

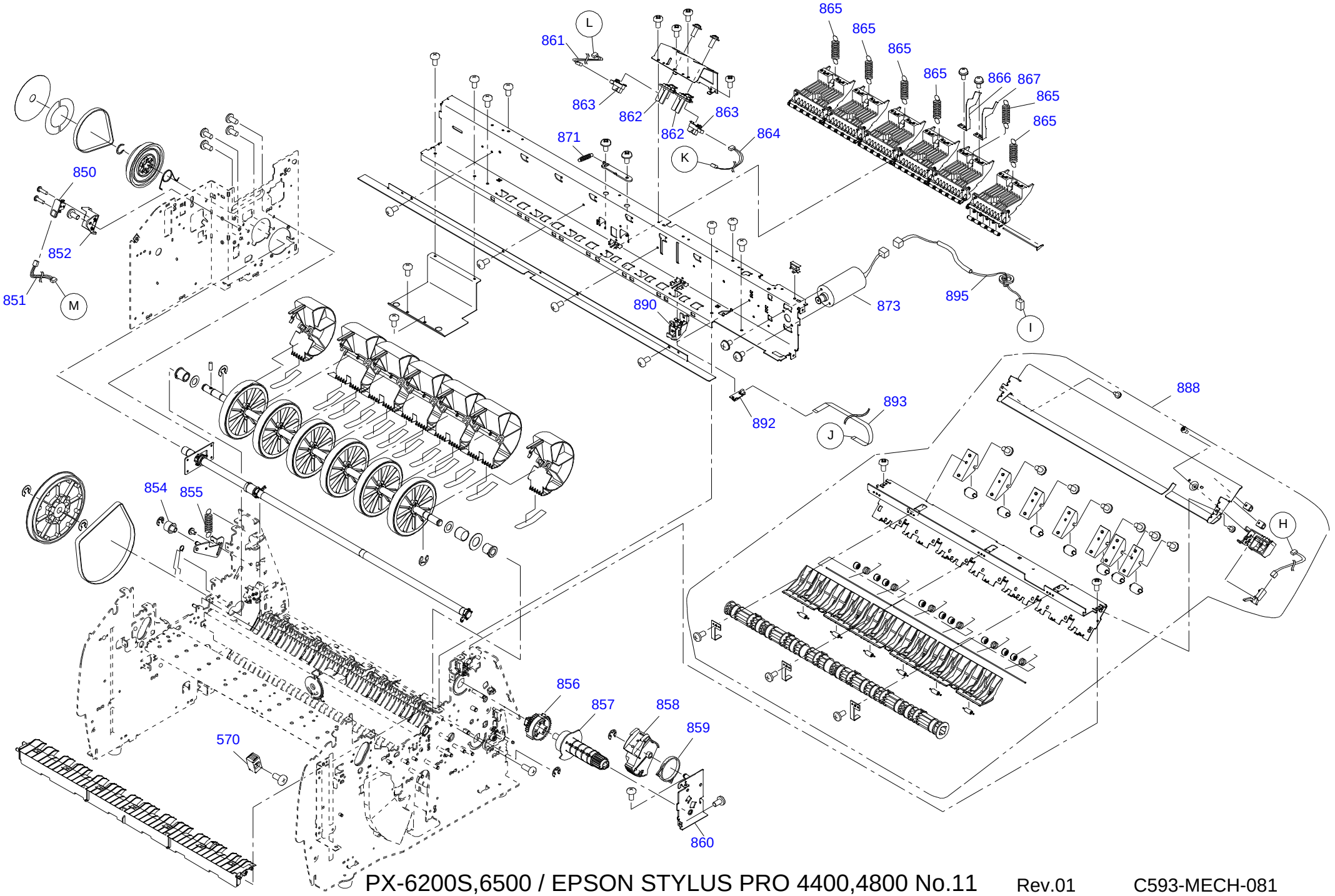

PX-6200S,6500 / EPSON STYLUS PRO 4400,4800 No.11 Rev.01 C593-MECH-081

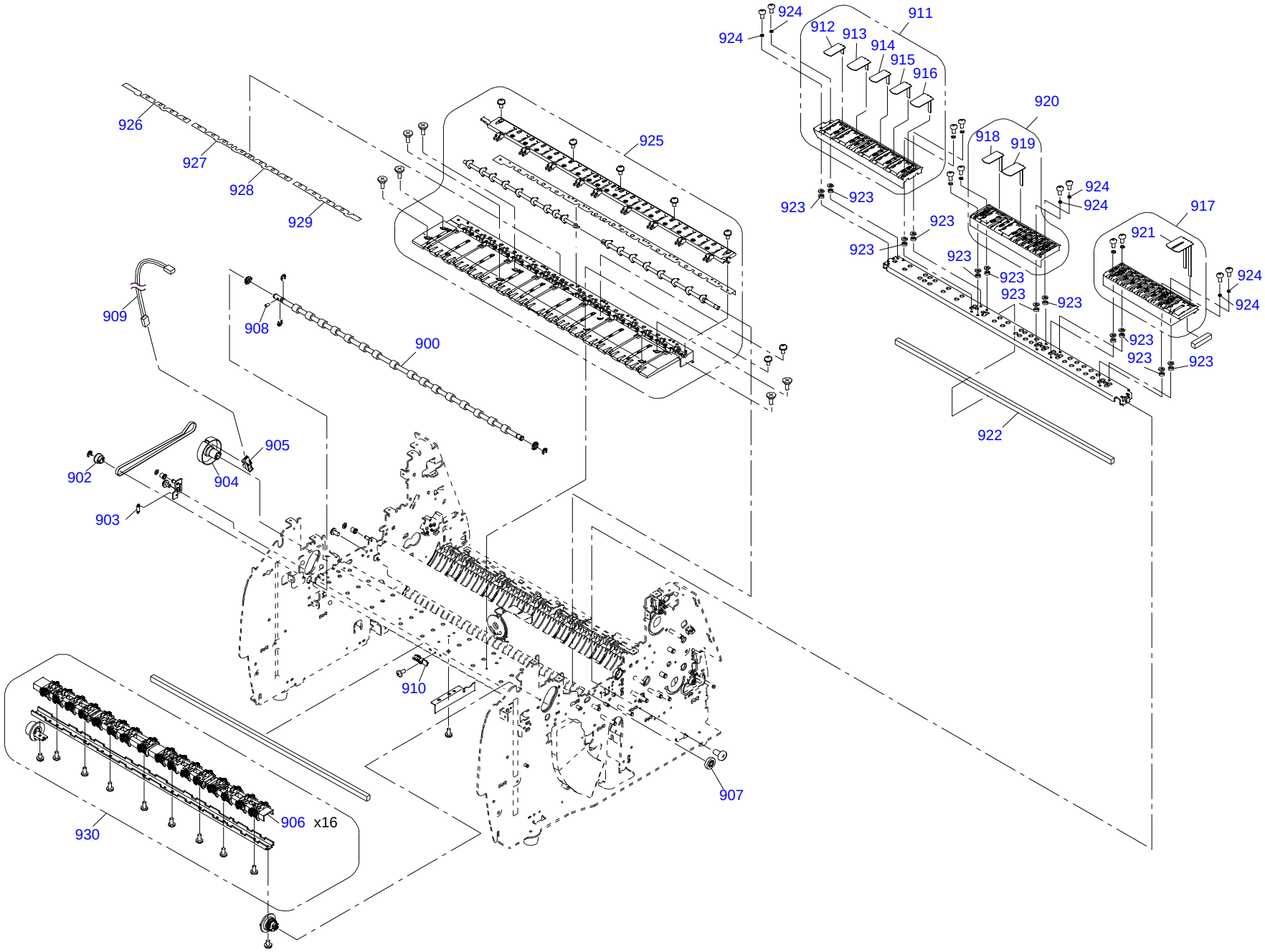

PX-6200S,6500 / EPSON STYLUS PRO 4400,4800 No.12 Rev.01 C593-MECH-091

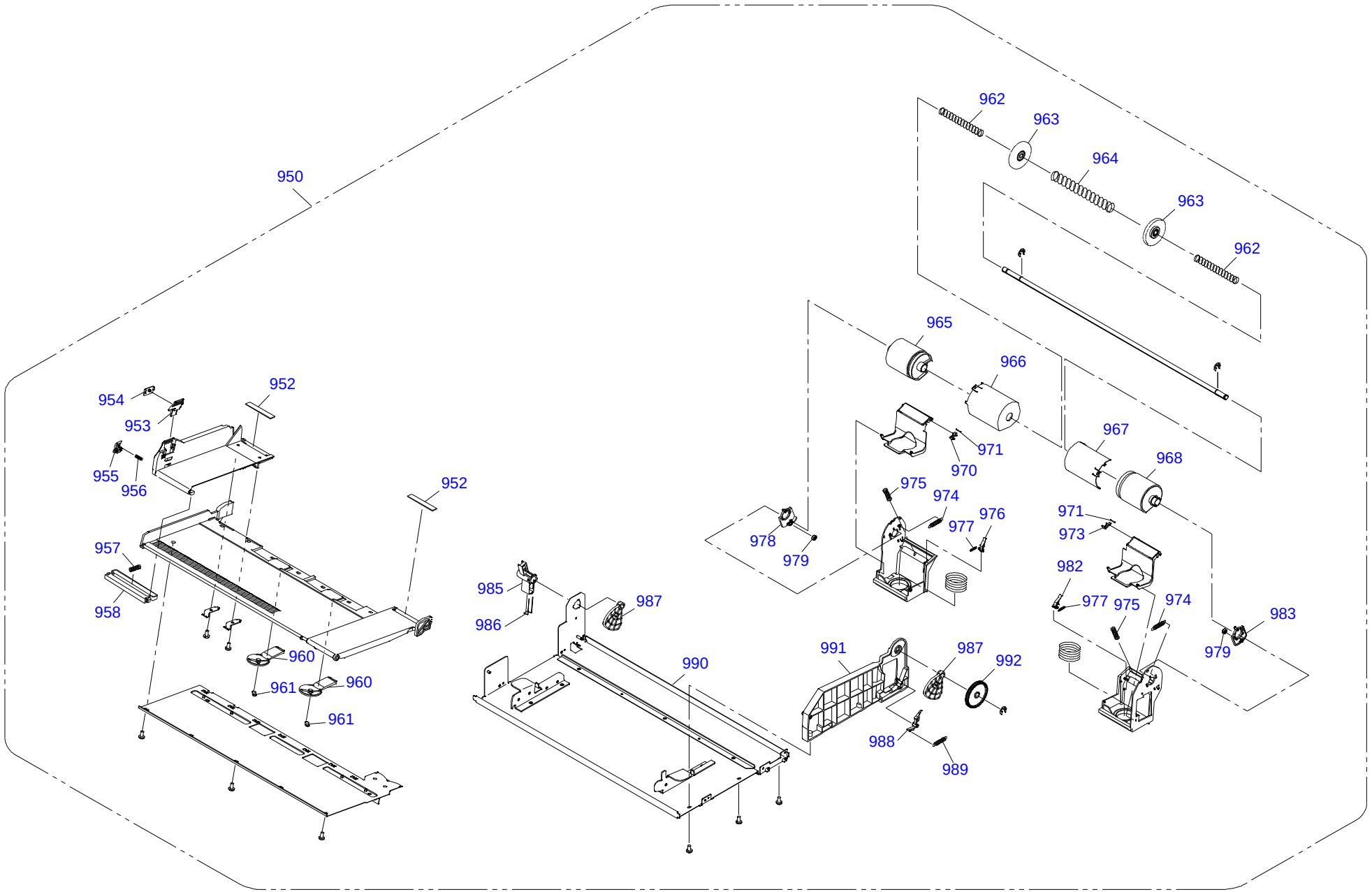

PX-6200S,6500 / EPSON STYLUS PRO 4400,4800 No.13 Rev.01 C593-MECH-101